Water saving mixers

Installation	Page 2-8
Service	Page 5-10
Use	Page 11
Maintenance	Page 12
Spare parts	Page 13-19

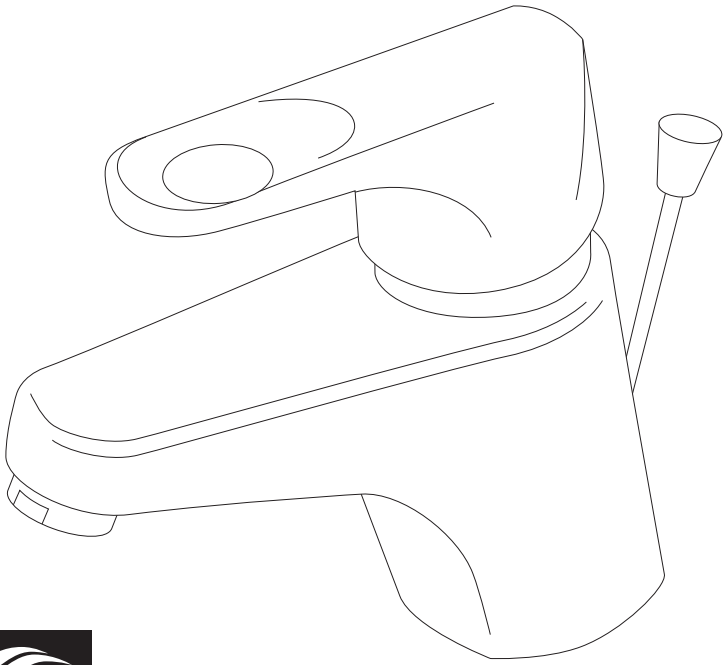

NORDIC QUALITY

Vi rekommenderar att installationen göres enligt branschreglerna "Säker Vatteninstallation"
We recommend to install according to trade regulation "Säker Vatteninstallation" (Safe waterinstallation)

Installation
Clean the pipes

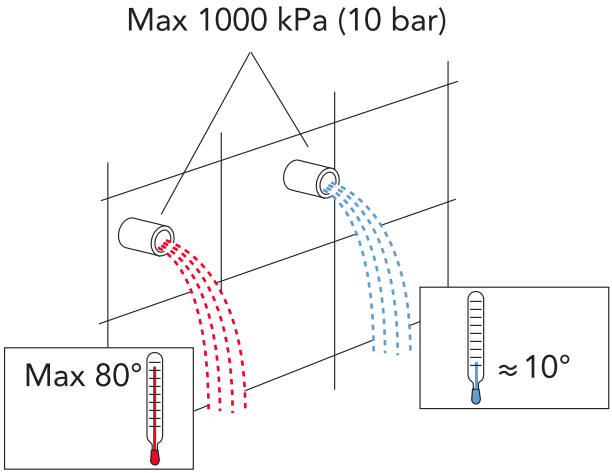

Installation
Mounting

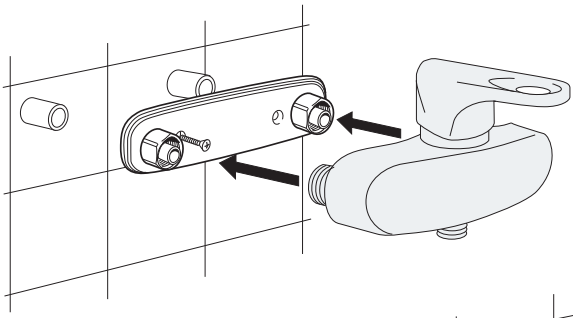

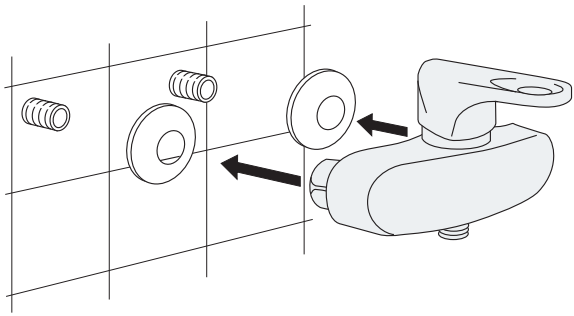

Installation
Mounting

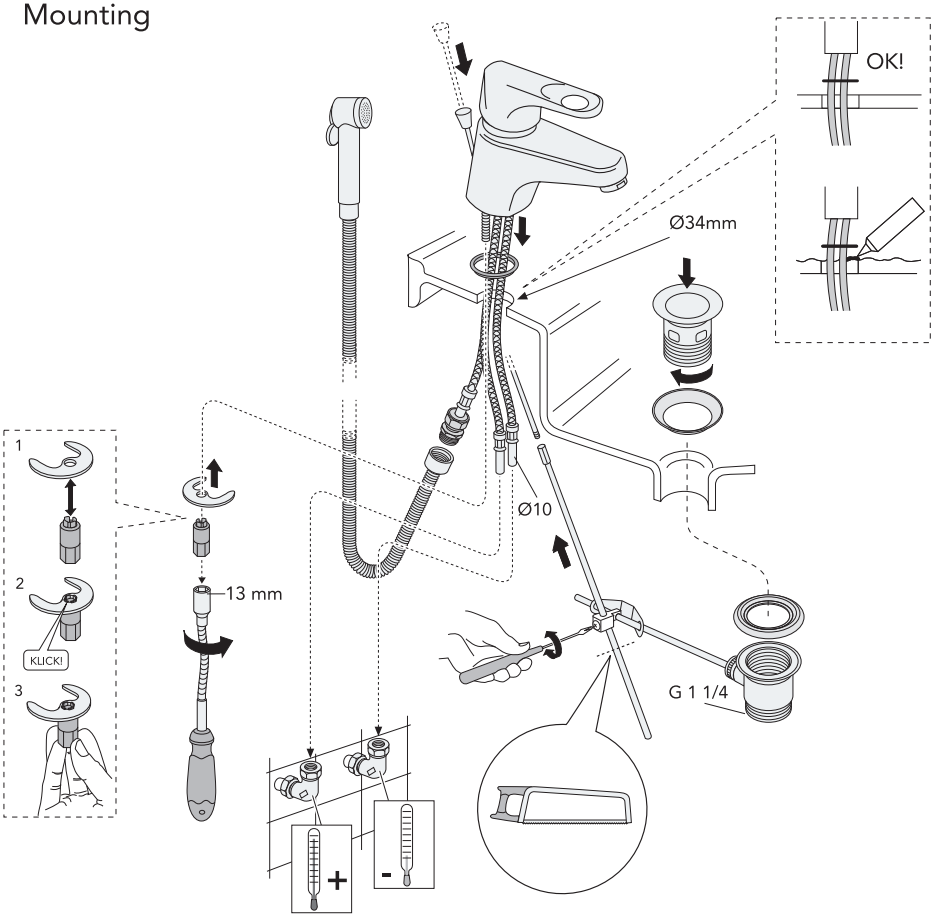

Installation
Mounting

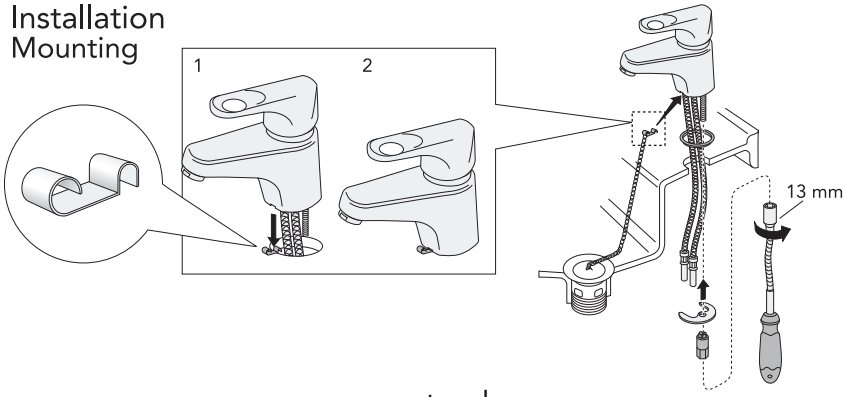

Installation
Mounting

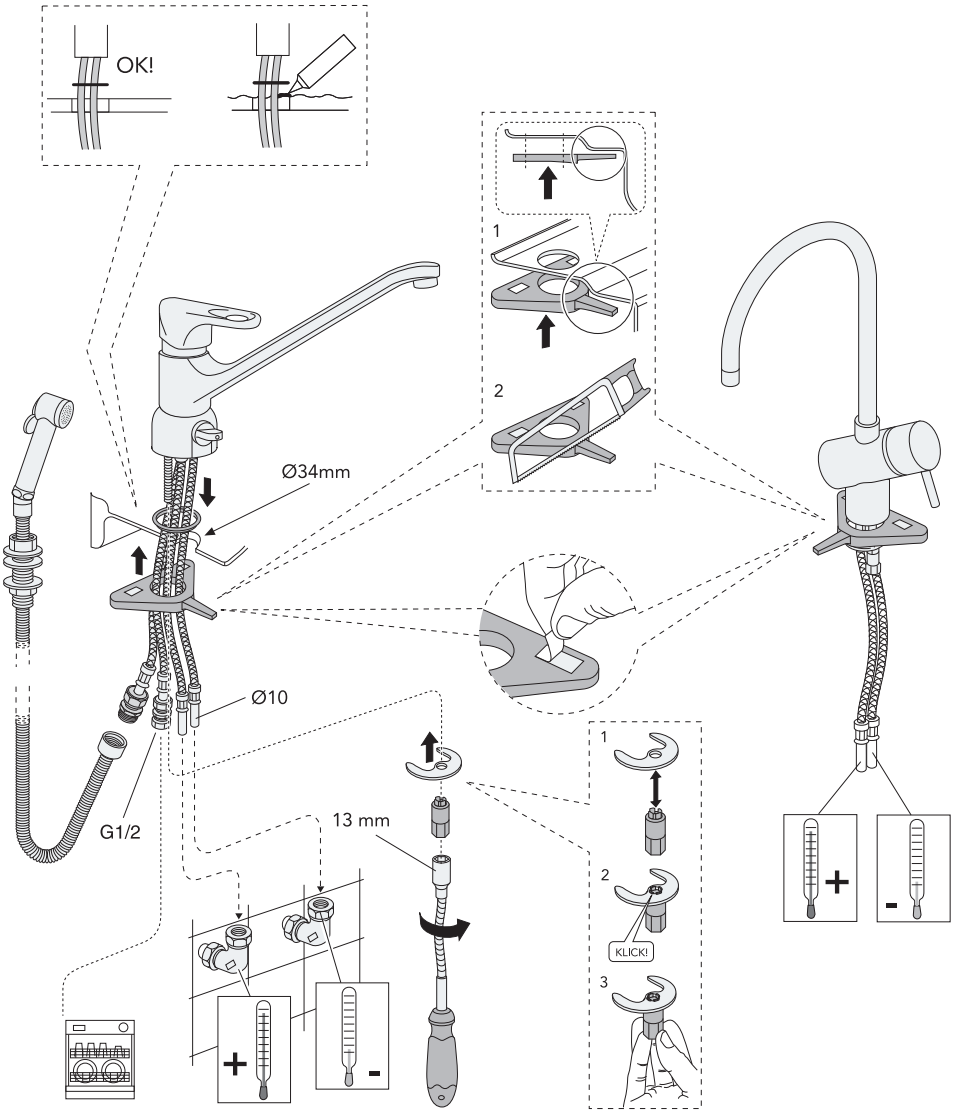

Clean

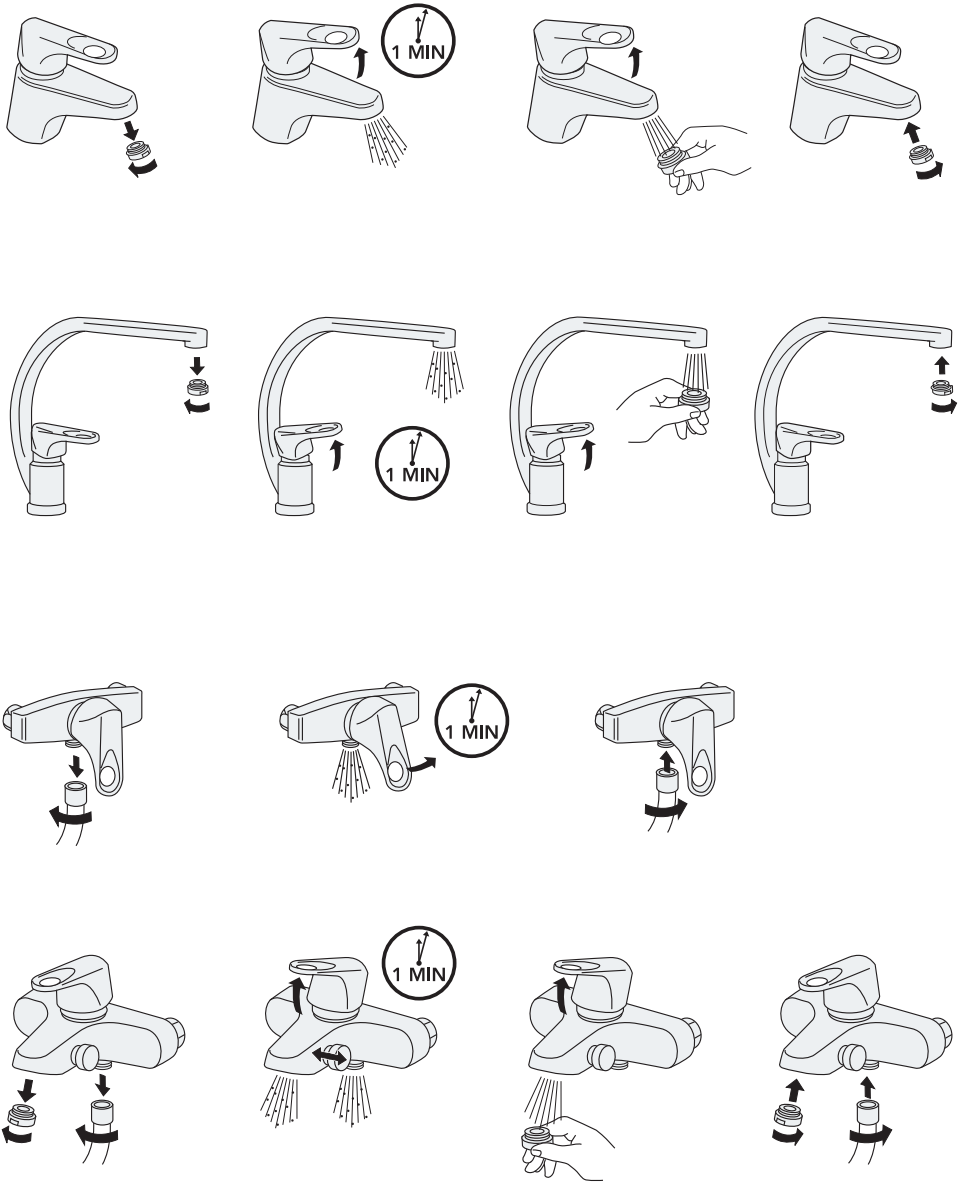

Installation/Service
Adjustment water saving

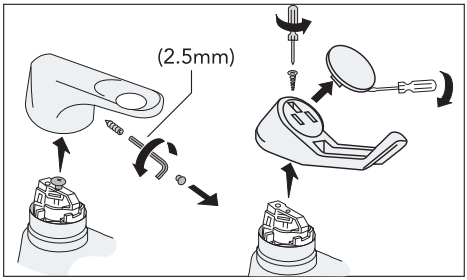

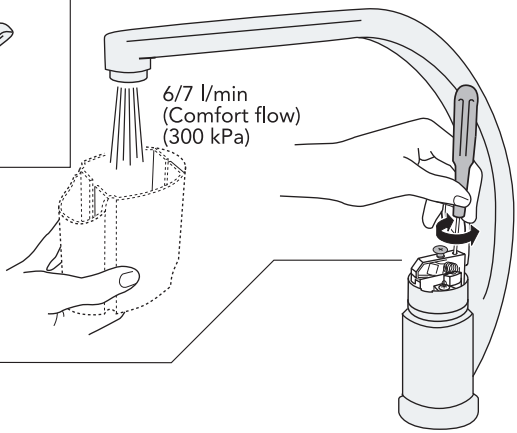

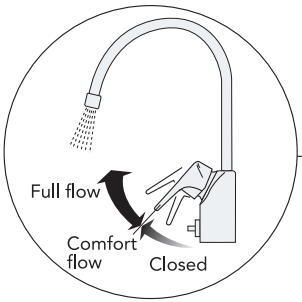

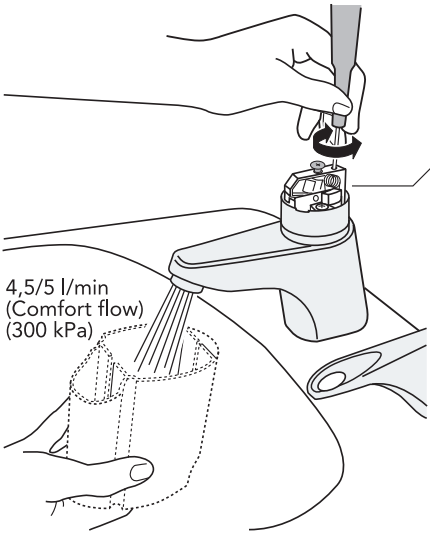

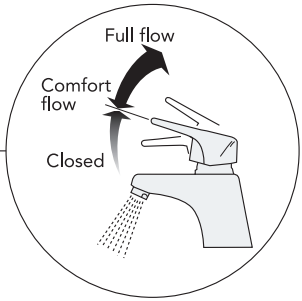

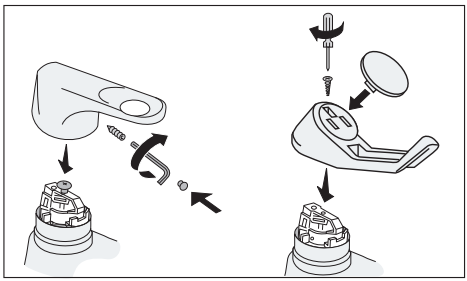

Installation/Service

Temp adjustment/Limit temperature

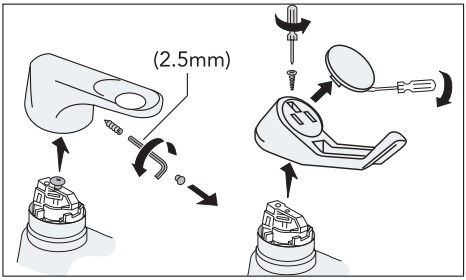

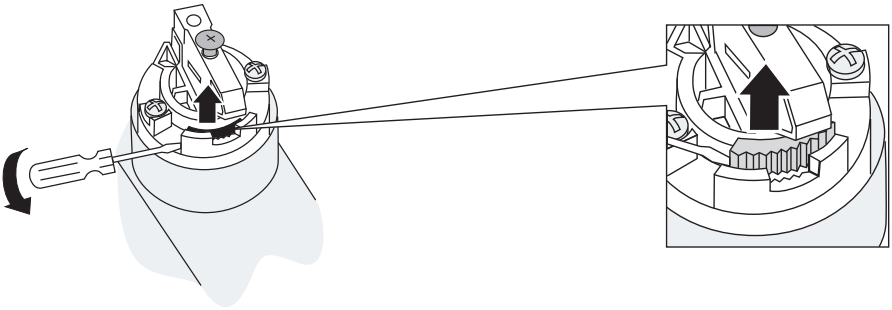

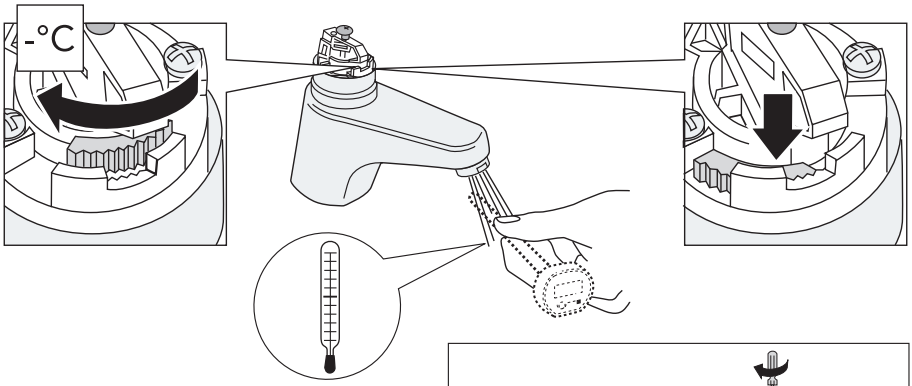

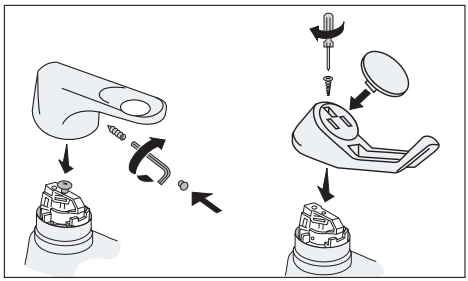

Installation/Service

Adjustment energy saving

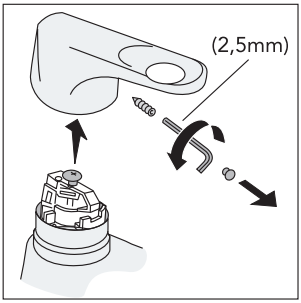

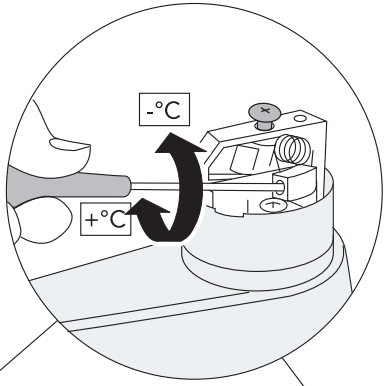

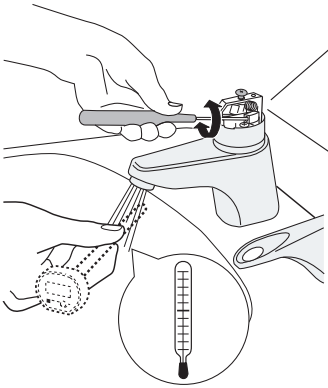

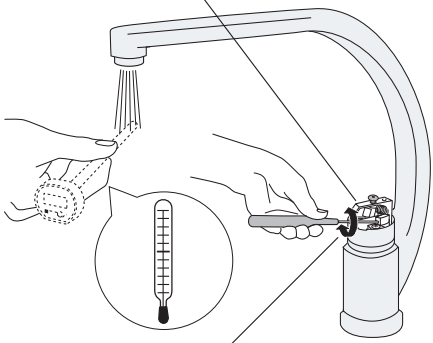

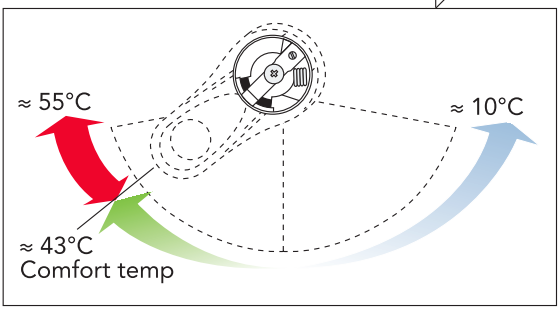

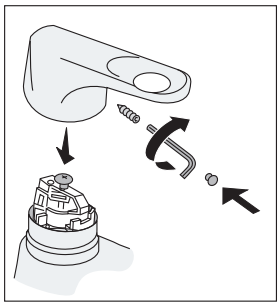

Replacing the cartridge

1

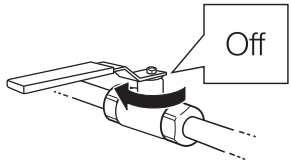

2

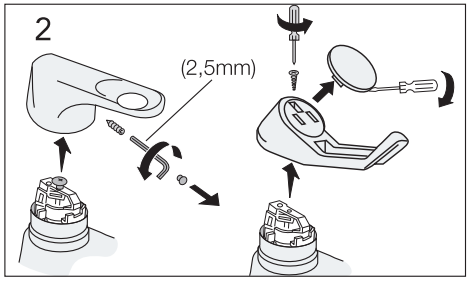

3

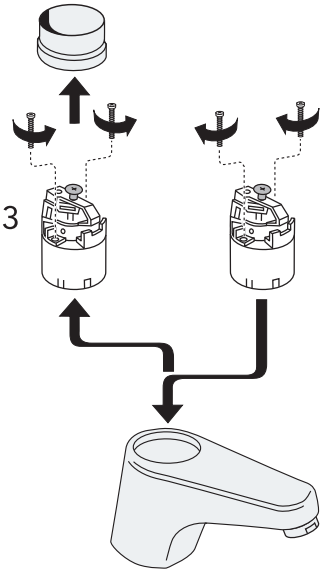

4

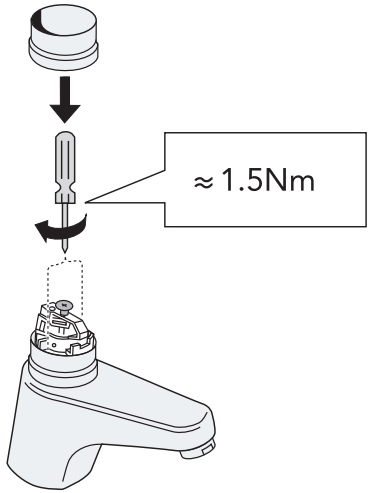

5

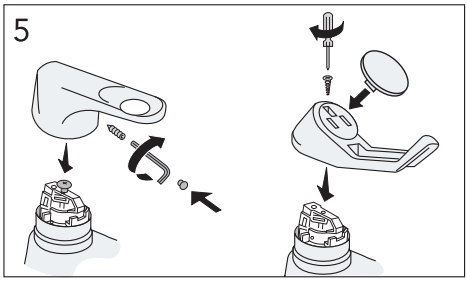

6

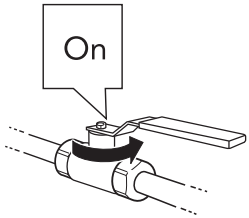

Service

Adjustment from cold to hot water

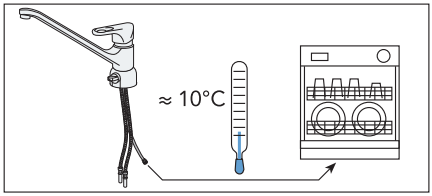

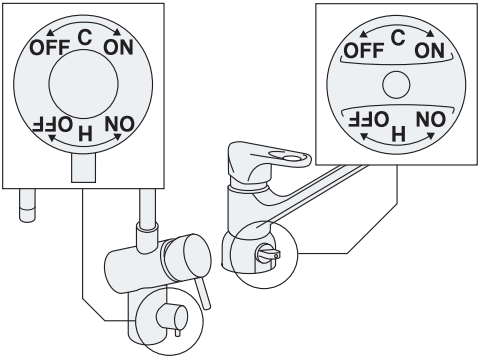

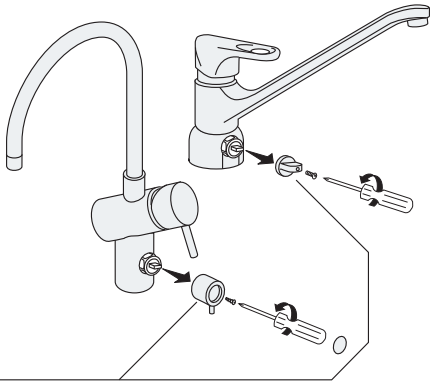

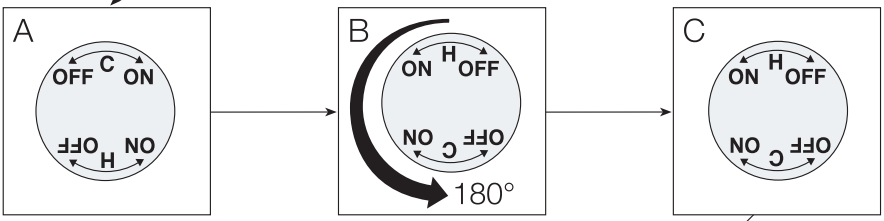

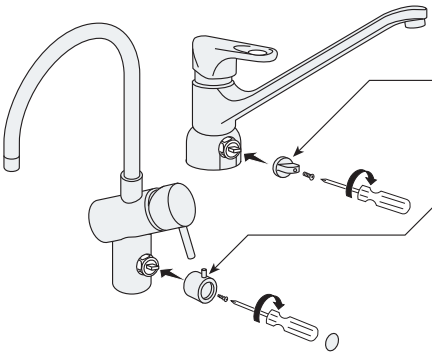

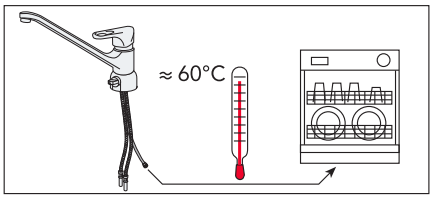

Use — Energi saving

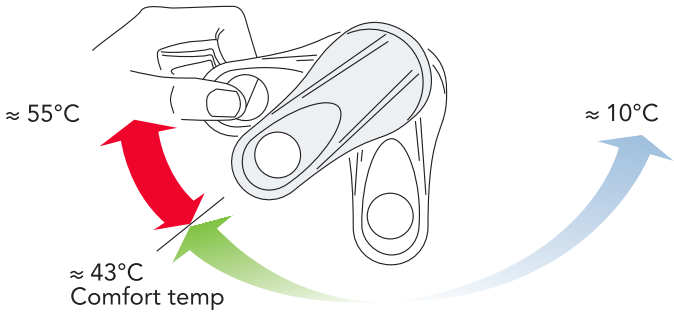

Use — Water saving

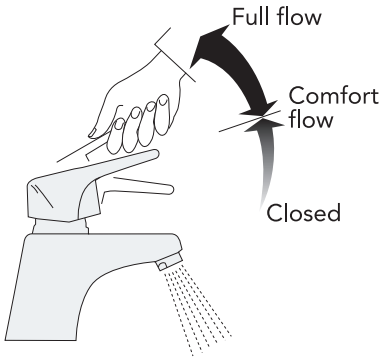

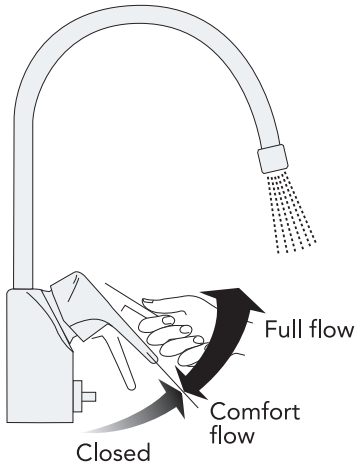

Maintenace

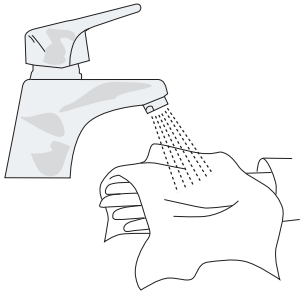

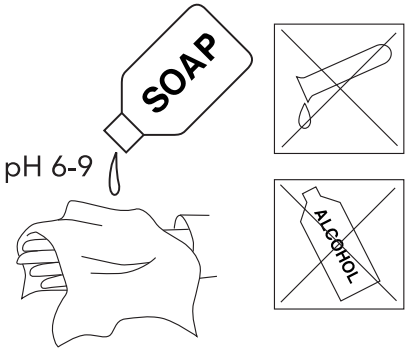

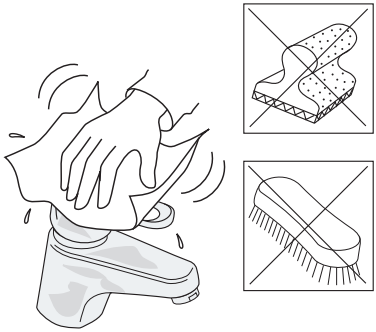

Spare parts

Centic

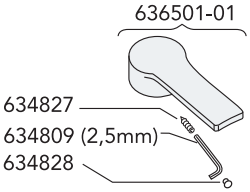

Nordic Plus/Pro

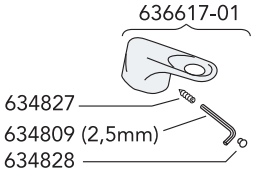

Nordic TT

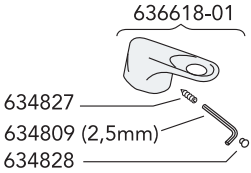

Centic

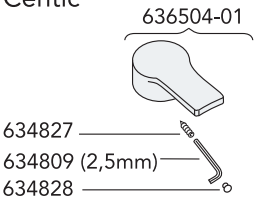

Arctic

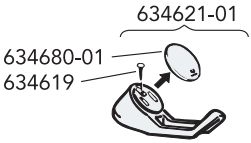

ND 40

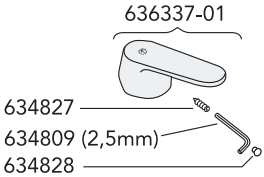

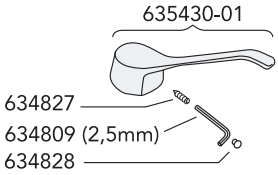

Skandic 03

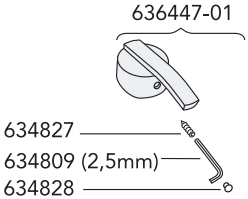

Skandic 03

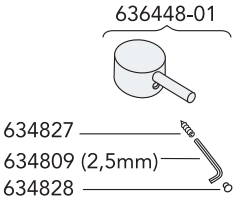

Collection

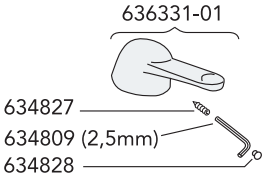

Skandic 03 Mini

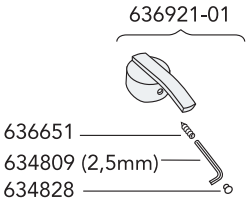

Skandic 03 Mini

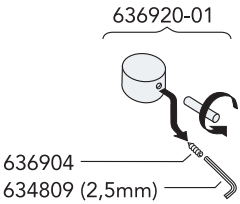

Spare parts

636326-01
636302
636319
636319
633877-01
TT-function
635678-8701
633513-01
2007-05
38mm
637453
630131-01
≈ 55°C
≈ 10°C
≈ 43°C
Comfort temp
637450
637161-02
637280-01

636326-01
636302
636319
633877-01
633513-01
630131-01
637280-01

636606
635680-01
630131-01
637075-01

635671
635680-01
636319
633877-01
633513-01
630131-01
637280-01

636655-01
636654-01
636912-01
637280-01

Spare parts

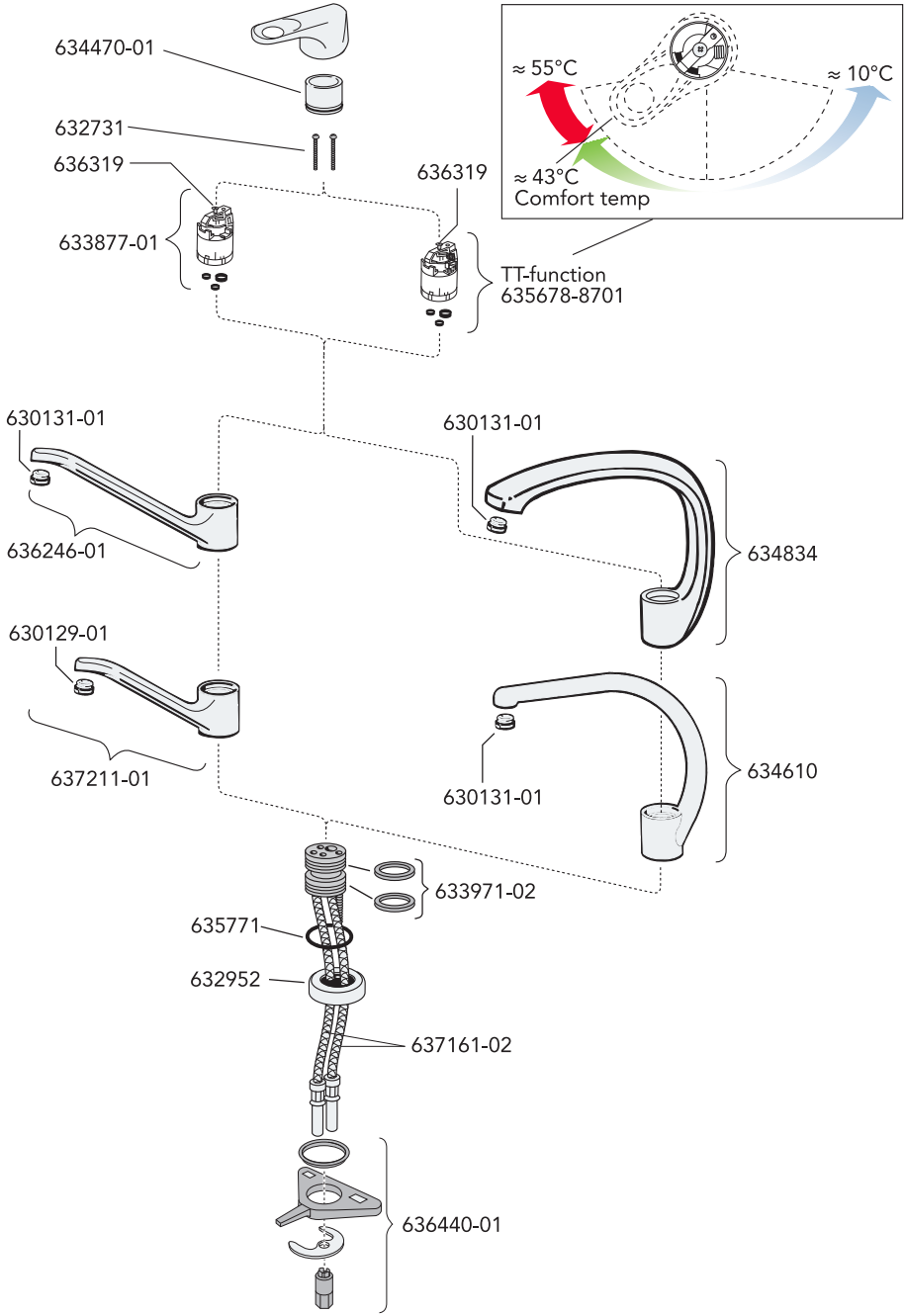
634470-01
632731
636319
633877-01
636319
≈ 55°C
≈ 10°C
≈ 43°C
Comfort temp
TT-function
635678-8701
630131-01
636246-01
630131-01
634834
630129-01
637211-01
630131-01
634610
633971-02
635771
632952
637161-02
636440-01

Spare parts

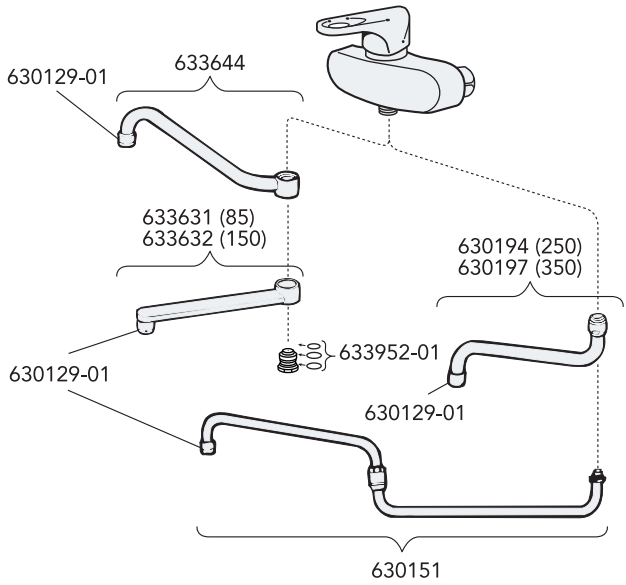
630129-01
633644
633631 (85)
633632 (150)
630194 (250)
630197 (350)
633952-01
630129-01
630129-01
630151

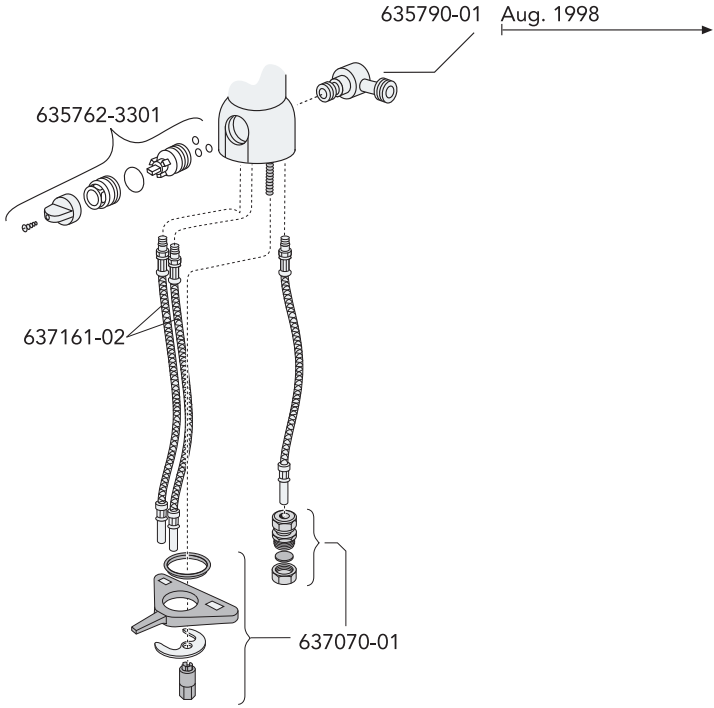
635790-01
Aug. 1998
635762-3301
637161-02
637070-01

Spare parts

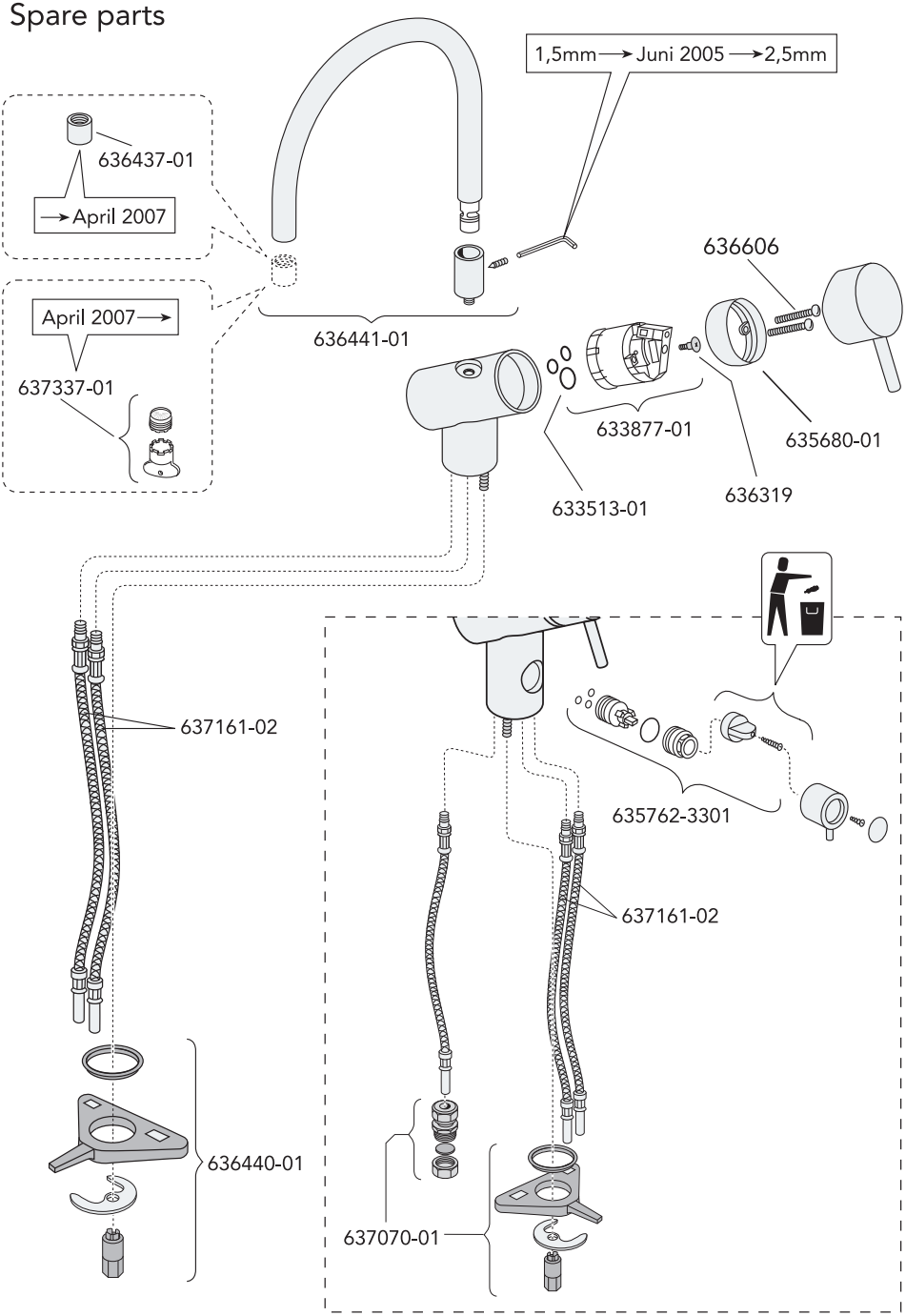
1,5mm → Juni 2005 → 2,5mm
636437-01
→ April 2007
April 2007 →
637337-01
636441-01
636606
633877-01
635680-01
633513-01
636319
637161-02
635762-3301
637161-02
636440-01
637070-01

Spare parts

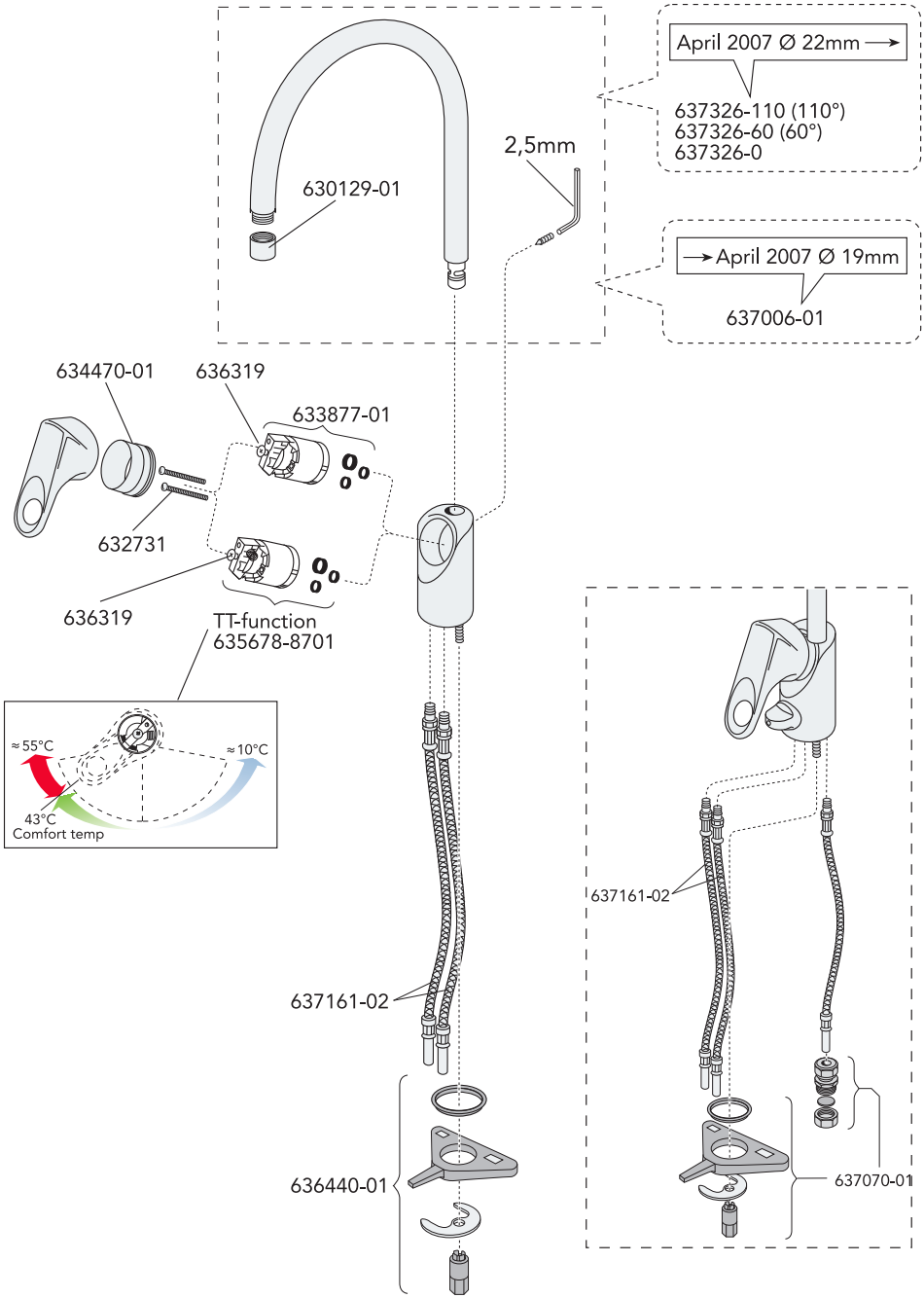
April 2007 Ø 22mm →
637326-110 (110°)
637326-60 (60°)
637326-0
2,5mm
630129-01
→ April 2007 Ø 19mm
637006-01
634470-01
636319
633877-01
632731
636319
TT-function
635678-8701
≈ 55°C
≈ 10°C
43°C
Comfort temp
637161-02
637161-02
636440-01
637070-01

Spare parts

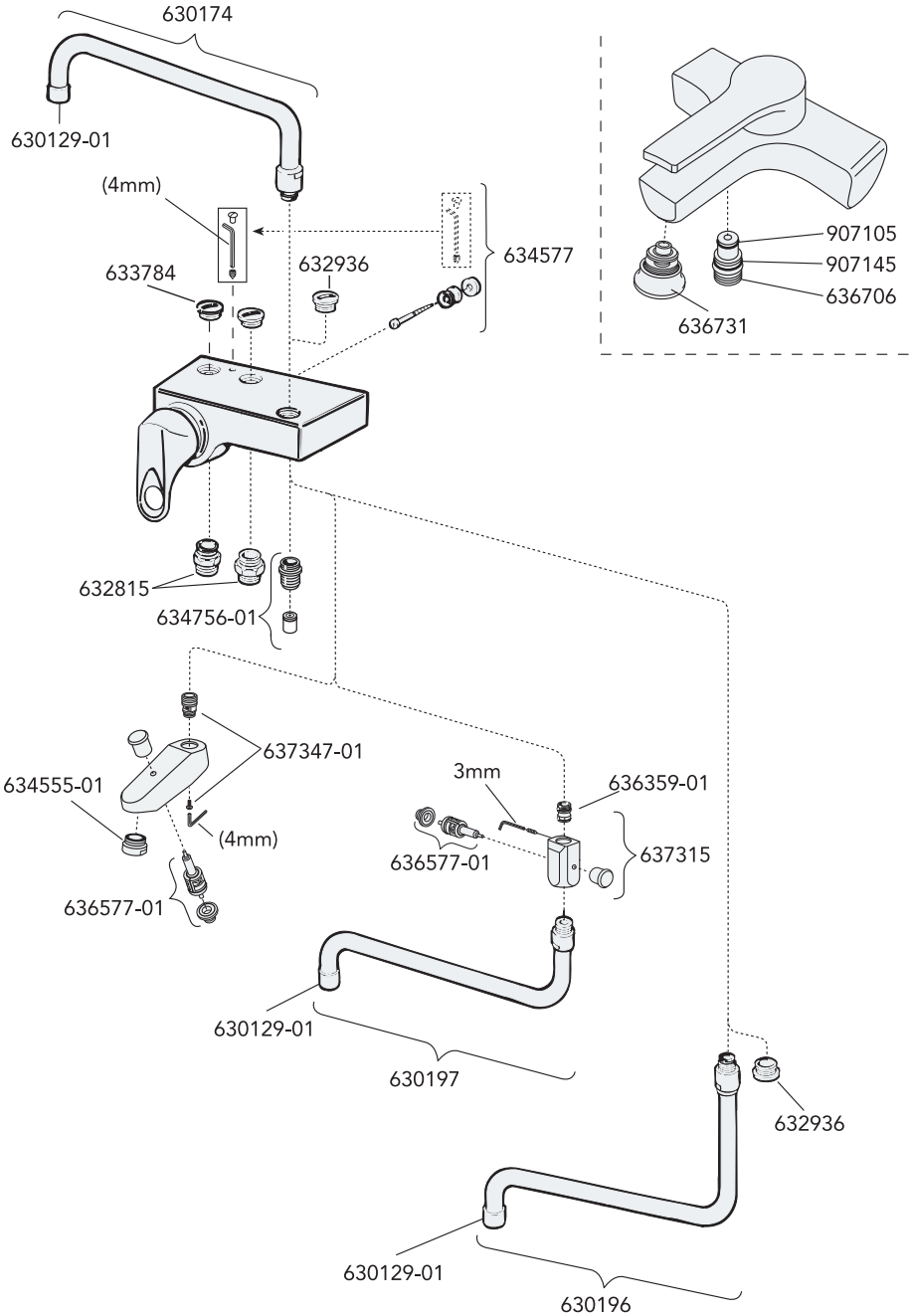
630174
630129-01
(4mm)
633784
632936
634577
907105
907145
636706
636731
632815
634756-01
637347-01
634555-01
(4mm)
636577-01
3mm
636359-01
636577-01
637315
630129-01
630197
632936
630129-01
630196

Sweden
Villeroy & Boch Gustavsberg AB
Box 400
134 29 Gustavsberg
Phone +46 8 570 391 00
Fax +46 8 570 320 36
info@gustavsberg.com

Norway
Villeroy & Boch Norge AS
Postboks 13
1471 Lørenskog
Tlf. + 47 67 97 82 50
Faks +47 67 97 16 57
info@gustavsberg.no

Estonia
Gustavsberg Eesti
Faehlmanni 6
10125 Tallinn
Phone +372 646 03 12
Fax +372 646 0313
info@gustavsberg.ee

Lithuania
Oy Gustavsberg Ab filialas
A. Goštauto g. 40A, II aukštas
LT-01112 Vilnius
Tel +370 (5) 246 08 10
Faksas +370 (5) 269 16 20
info@gustavsberg.lt

Russia
Gustavsberg
Hodynskij blv. 13, office 19
125252 Moscow.
Phone +7 495 232 1632
Fax +7 495 232 1633
info@gustavsberg.ru

Denmark
Villeroy & Boch Danmark A/S
Vallensbækvej 26-28
2605 Brøndby
Phone + 45 36 70 80 55
Fax + 45 36 72 08 05
info@gustavsberg.dk

Suomi/Finland
Oy Gustavsberg Ab
Laippatie 14 b
00880 Helsinki
Puh +358 9-32 91 88 11
Fax + 358 9-32 91 88 50
myynti@gustavsberg.com

Latvia
Gustavsberg
Krasta iela 68 A
LV - 1019 Riga
Phone +371 724 55 11
Fax +371 724 55 19
ivars.viksne@gustavsberg.com

Ukraine
Gustavsberg
Chapayeva Str. 4, office 17
01030 Kiev
Phone +38 044 493 98 68
Fax +38 044 493 98 67
info@gustavsberg.kiev.ua

Russia
Gustavsberg
Kirochnaya str 40, office 7
191123 St. Petersburg
Phone +7 812 326 7896
Fax +7 812 326 7899
office@gustavsberg.spb.ru

09.08

www.gustavsberg.com

Art. nr TC633208/18